SQUID systems for acoustic GW detectors: progress in sensitivity and long-term reliability

A. Vinante [(a)], R. Mezzena [(a)], G. A. Prodi [(a)], S. Vitale[(a)], M. Bonaldi [(b)], P. Falferi [(b)], M. Cerdonio [(c)]
(a) Dipartimento di Fisica, Università di Trento and INFN, Gruppo Collegato di Trento, Sezione di Padova, I-38050 Povo, Trento, Italy
(b) Istituto di Fotonica e Nanotecnologie, CNR-ITC and INFN, Gruppo Collegato di Trento, Sezione di Padova, I-38050 Povo, Trento, Italy
(c) Dipartimento di Fisica, Università di Padova and INFN, Sezione di Padova, via Marzolo 8, I-35131, Padova, Italy

• **A dc SQUID system in two-stage configuration has been successfully operated** as first stage amplifier of the capacitive transducer developed for the AURIGA gravitational wave detector (see JP Zendri, in this Conference) **with a true noise energy of the order of about 150 ħ** at 900 Hz. However recently proposed next generation detectors (like DUAL) will require amplifiers with a noise close to the quantum limit (~ħ) in the kHz frequency range. Further improvements are thus required.

• **The effective performance of a SQUID amplifier** operated on an acoustic GW detector at kHZ frequency **is determined by several factors**, involving not only the sensor but also the characteristics of the high Q input resonant load and the performance of the control electronics:

• **1/f noise**: not well-known, virtually unpredictable at ultracryogenic temperature.

• **Self heating mechanisms** at T≈100 mK, which prevent from further effective cooling and noise reduction (intrinsic white SQUID noise scales with T!).

→ Further investigation on new different sensors in order to approach the best possible intrinsic noise in the kHz frequency range. Try to improve the effective cooling of the sensor.

• Dynamic range problems due to the **large input signal** picked up by a real tranducer (both capacitive and inductive).

• Reduction of the effective long-term duty-cycle due to occasional **unlocks or bias point drifts**.

→ Development of reliable control electronics with high enough dynamic range, optimized for long-term operation on a real GW detector.

• **Stabilization of high Q resonances** in the low loss input load.

• Estimation and minimization of the **effective back-action noise** on the high Q resonant input load. Estimation of the device **true noise temperature**.

→ See P.Falferi et al, poster presented in this Conference.

Noise measurements on two different sensor SQUIDs at ultracryogenic temperatures

Experimental Configuration

• Two-stage readout

• Sensor SQUIDs S1: Quantum Design (QD) or Quantum Magnetics (QM).

• Amplifier SQUID S2 (Quantum Design SQUID).

• Electronics: see below.

• Chip boards mounted in Nb shields in thermal contact with the mixing chamber of a dilution refrigerator (but in vacuum!).

Parameters of the sensor SQUIDs:

Quantum Design SQUID

• Shunt resistor R_s=2Ω, loop inductance L_s=80 pH

• Input coil: M_i=10 nH, L_i=1.6 μH

• Gradiometric and symmetric layout

Quantum Magnetics SQUID

• R_s=10Ω, L_s=115 pH

• M_i=10 nH, L_i=1.0 μH

• Single loop washer ("Ketchen" type)

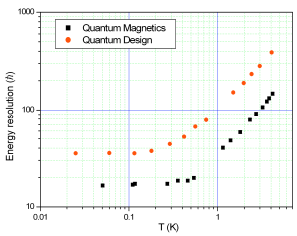

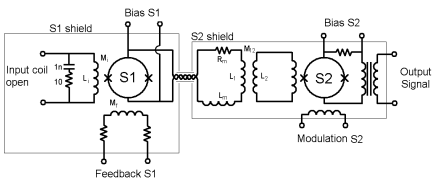

Experimental results (conventional energy resolution referred to input coil $L_i/2M_i^2 \times S_{\phi\phi}$)

• QM is about 3 times better than QD at T>1K and 2 times better at low T. **Lowest measured noise is 16 ħ.**

• **Low temperature saturation** related to a bad thermal sinking. Corresponding equivalent saturation temperatures 250 mK for QD and 440 mK for QM. Plan to improve thermal sinking and thus low temperature noise by using exchange ^{3}He gas.

• Noise measured at 5-7 kHz. At 1 kHz 1/f noise is non negligible. **1/ f contributions** at 1 kHz is about 13 ħ for QM and about 30 ħ for QD.

New control electronics for a two-stage SQUID optimized for a resonant GW detector

Main features

• Operates in series to a commercial (Quantum Design) electronics with modulation (used for the second stage SQUID signal readout).

• Optimized feedback **integrator with 2-poles and 1-zero** (Giffard, 1980).

• Bandwidth ≈ 100 kHz.

• **Automatic reset** to prevent integrator saturations.

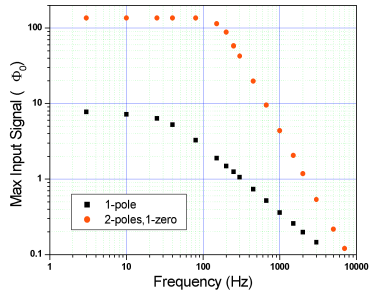

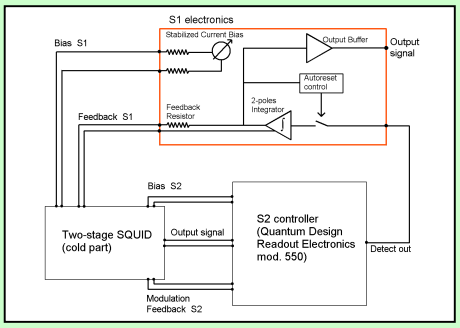

Slew-rate measurement (max input signal before unlock)

• **Improvement by a factor 50 at 100 Hz** and a factor 10 at 1 kHz with respect to a standard 1-pole integrator with the same bandwidth.

• Dynamics **high enough** to deal with typical low frequency signals from both capacitive and inductive transducers of resonant GW detectors (Maximum some tens Φ_0).